CAPE GIBSON
NORFOLK, VA.
IMO 6821614
38

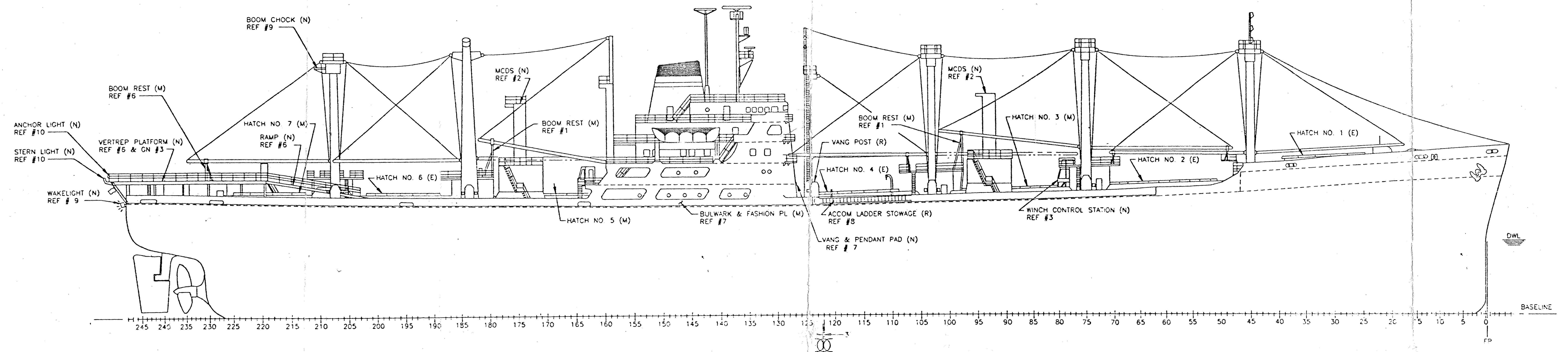
BOOM CHOCK (N)
REF #9
BOOM REST (M)
REF #6
ANCHOR LIGHT (N)
REF #10
STERN LIGHT (N)
REF #10
VERTREP PLATFORM (N)
REF #6 & GN #3
HATCH NO. 7 (M)
RAMP (N)
REF #6
HATCH NO. 6 (E)
WAKELIGHT (N)
REF # 9
MCDS (N)
REF #2
BOOM REST (M)
REF #1
HATCH NO. 5 (M)
BULWARK & FASHION PL (M)
REF #7
VANG POST (R)
HATCH NO. 4 (E)
ACCOM LADDER STOWAGE (R)
REF #8
VANG & PENDANT PAD (N)
REF # 7
MCDS (N)
REF #2
BOOM REST (M)
REF #1
HATCH NO. 3 (M)
WINCH CONTROL STATION (N)
REF #3
HATCH NO. 2 (E)
HATCH NO. 1 (E)
DWL
BASELINE
245 240 235 230 225 220 215 210 205 200 195 190 185 180 175 170 165 160 155 150 145 140 135 130 125 120 115 110 105 100 95 90 85 80 75 70 65 60 55 50 45 40 35 30 25 20 15 10 5 0

GENERAL NOTES

1. ITEMS SHOWN IN PHANTOM LINES ARE FOR REMOVAL
2. ALL ABBREVIATIONS ARE IN ACCORDANCE WITH MIL-STD-12D UNLESS OTHERWISE NOTED.
3. THE VERTREP PLATFORM IS 58'-0" ABOVE BASELINE AND HAS NEITHER CAMBER NOR SHEER.

LEGEND

KP = KINGPOST
(N) = NEW
(M) = MODIFIED
(R) = RELOCATED
(E) = EXISTING
MCDS = MODULAR CARGO DELIVERY STATION
WTQA = WATER TIGHT QUICK ACTING
SOT = SYSTEM OPERABILITY TEST

PRINCIPAL CHARACTERISTICS

LENGTH OVERALL	60[illegible]'-0
LENGTH BETWEEN PERPENDICULARS	5[illegible]'-6
BREADTH MOLDED	9[illegible] 6
DRAFT, DESIGN MOLDED	3[illegible] -6
SHIP ACCOMMODATIONS	7[illegible]

REVISIONS

REV	ZONE	DESCRIPTION	DATE	APVD
–	ALL	INITIAL ISSUE		
A	ALL	1.) THIS DRAWING REVISED BY GIANNOTTI MARINE SERVICES, VENTURA, CA AS DESIGN AGENTS FOR SOUTHWEST MARINE, TERMINAL ISLAND, CA.	9-27-92	AMC
	5-C, 11-C	2.) ADDED UNREP GEAR LOCKER		
	9-C	3.) ADDED CRASH/RESCUE LOCKER		
	2-C	4.) DELETED "ADVANCED MARINE ENTERPRISES" TITLE BLOCK (ORIGINATOR OF ALT. –).		
	1-C	5.) EXPANDED TITLE OF REFERENCE NO. 9 FOR COMPLETENESS.		

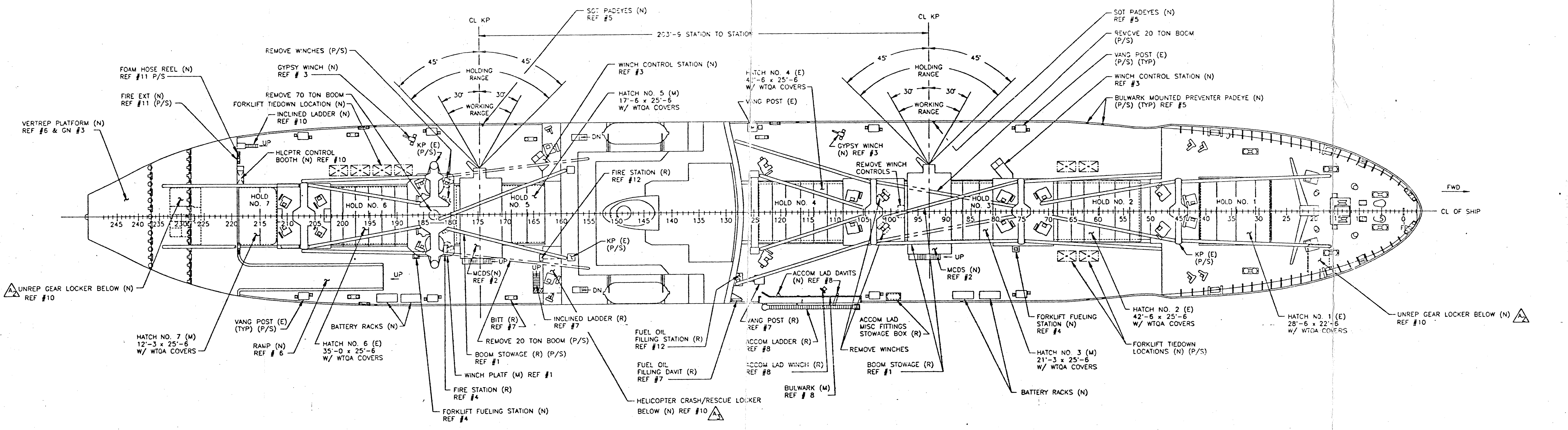
CL KP
203'-9 STATION TO STATION
45°
45°
HOLDING RANGE
30°
30°
WORKING RANGE
SOT PADEYES (N)
REF #5
REMOVE WINCHES (P/S)
GYPSY WINCH (N)
REF # 3
FOAM HOSE REEL (N)
REF #11 P/S
FIRE EXT (N)
REF #11 (P/S)
REMOVE 70 TON BOOM
FORKLIFT TIEDOWN LOCATION (N)
INCLINED LADDER (N)
REF #10
VERTREP PLATFORM (N)
REF #6 & GN #3
HLCPTR CONTROL BOOTH (N) REF #10
UP
KP (E)
(P/S)
WINCH CONTROL STATION (N)
REF #3
HATCH NO. 5 (M)
17'-6 x 25'-6
W/ WTQA COVERS
DN
FIRE STATION (R)
REF #12
HOLD NO. 7
HOLD NO. 6
HOLD NO. 5
KP (E)
(P/S)
A2 UNREP GEAR LOCKER BELOW (N)
REF #10
HATCH NO. 7 (M)
12'-3 x 25'-6
W/ WTQA COVERS
VANG POST (E)
(TYP) (P/S)
RAMP (N)
REF # 6
BATTERY RACKS (N)
HATCH NO. 6 (E)
35'-0 x 25'-6
W/ WTQA COVERS
MCDS(N)
REF #2
BITT (R)
REF #7
INCLINED LADDER (R)
REF #7
REMOVE 20 TON BOOM (P/S)
BOOM STOWAGE (R) (P/S)
REF #1
WINCH PLATF (M) REF #1
FIRE STATION (R)
REF #4
FORKLIFT FUELING STATION (N)
REF #4
FUEL OIL
FILLING STATION (R)
REF #12
FUEL OIL
FILLING DAVIT (R)
REF #7
HELICOPTER CRASH/RESCUE LOCKER
BELOW (N) REF #10 A3
HATCH NO. 4 (E)
42'-6 x 25'-6
W/ WTQA COVERS
VANG POST (E)
GYPSY WINCH
(N) REF #3
REMOVE WINCH CONTROLS
HOLD NO. 4
HOLD NO. 3
HOLD NO. 2
HOLD NO. 1
SOT PADEYES (N)
REF #5
REMOVE 20 TON BOOM
(P/S)
VANG POST (E)
(P/S) (TYP)
WINCH CONTROL STATION (N)
REF #3
BULWARK MOUNTED PREVENTER PADEYE (N)
(P/S) (TYP) REF #5
FWD
CL OF SHIP
ACCOM LAD DAVITS
(N) REF #8
UP
MCDS (N)
REF #2
VANG POST (R)
REF #7
ACCOM LADDER (R)
REF #8
ACCOM LAD WINCH (R)
REF #8
BULWARK (M)
REF # 8
ACCOM LAD
MISC FITTINGS
STOWAGE BOX (R)
REMOVE WINCHES
BOOM STOWAGE (R)
REF #1
FORKLIFT FUELING
STATION (N)
REF #4
HATCH NO. 3 (M)
21'-3 x 25'-6
W/ WTQA COVERS
BATTERY RACKS (N)
HATCH NO. 2 (E)
42'-6 x 25'-6
W/ WTQA COVERS
FORKLIFT TIEDOWN
LOCATIONS (N) (P/S)
KP (E)
(P/S)
HATCH NO. 1 (E)
28'-6 x 22'-6
W/ WTQA COVERS
UNREP GEAR LOCKER BELOW (N) A2
REF #10
245 240 235 230 225 220 215 210 205 200 195 190 185 180 175 170 165 160 155 150 145 140 135 130 125 120 115 110 105 100 95 90 85 80 75 70 65 60 55 50 45 40 35 30 25 20 15 10 5 0
FP

NO	DRAWING NO	TITLE
13	S48-8-501	VERTREP PLATFORM DRAIN SYSTEM
12	S48-0-501	VERTREP MISC PIPING & VENTILATION MODS
11	S48-3-501	VERTREP FOAM FIREFIGHTING PIPING SYS
10	S9-0-501	VERTREP & MAIN DECK ARRANGEMENT & DETS
9	---	SPEC FOR MCDS/VERTREP SEF MODS (OCT 1991)
8	S16-4-501	ACCOMODATION LADDER & BULWARK MODS
7	S11-13-501	MISC STRUCTURAL MODIFICATIONS
6	S11-6-501	VERTREP PLATFORM STRUCTURE & DETAILS
5	S18-1-100	RIGGING MODS INCIDENTAL TO MCDS INSTL
4	S48-6-100	MCDS INSTALLATION MISC PIPING MODS
3	S11-13-101	MCDS WINCH CONT STA & GYPSY WINCH FDNS
2	S11-13-100	MCDS FOUNDATION AND STRL DETAILS
1	S11-6-100	WINCH HOUSE PLATFORM MODS

REFERENCES

PRELIMINARY

~~advanced marine enterprises, inc.~~
~~1725 je[illegible]rson davis highway~~
~~arli[illegible]ton, va 22202~~
~~(7[illegible]) 979-9200~~
~~CONTRACT NO~~
~~DRAWN BY T. [illegible] DATE~~
~~CHECKED BY B. ETHEM DATE~~
~~REVIEWED BY DATE~~
~~APP'D FOR ADVANCED MARINE ENT INC DATE~~

NAVAL SEA SYSTEMS COMMAND
REVIEWED
DATE
APPROVED
DATE

MARITIME ADMINISTRATION
REVIEWED
DATE
APPROVED
DATE

AMERICAN FOREIGN SHIPPING COMPANY
REVIEWED
DATE
APPROVED
DATE

PROJECT:
VERTREP & MODULAR CARGO DELIVERY STATION INTERFACE (C5-S-75a)

DESIGNED FOR:
NAVAL SEA SYSTEMS COMMAND
PMS-377

TITLE: S.S. CAPE GIBSON AND GIRARDEAU

GENERAL ARRANGEMENT

SCALE: 1/16" = 1'-0" DATE: 10-17-91 SHT 1 OF 1
DWG. NO. S9-0-100 ALT. A

APPROVED
Subject to comments in Marine Safety Center letter of
NOV 27 1992
T.W.
Commanding Officer
USCG Marine Safety Center

S9-0-100 | 1 | A